QUANSER
INNOVATE·EDUCATE

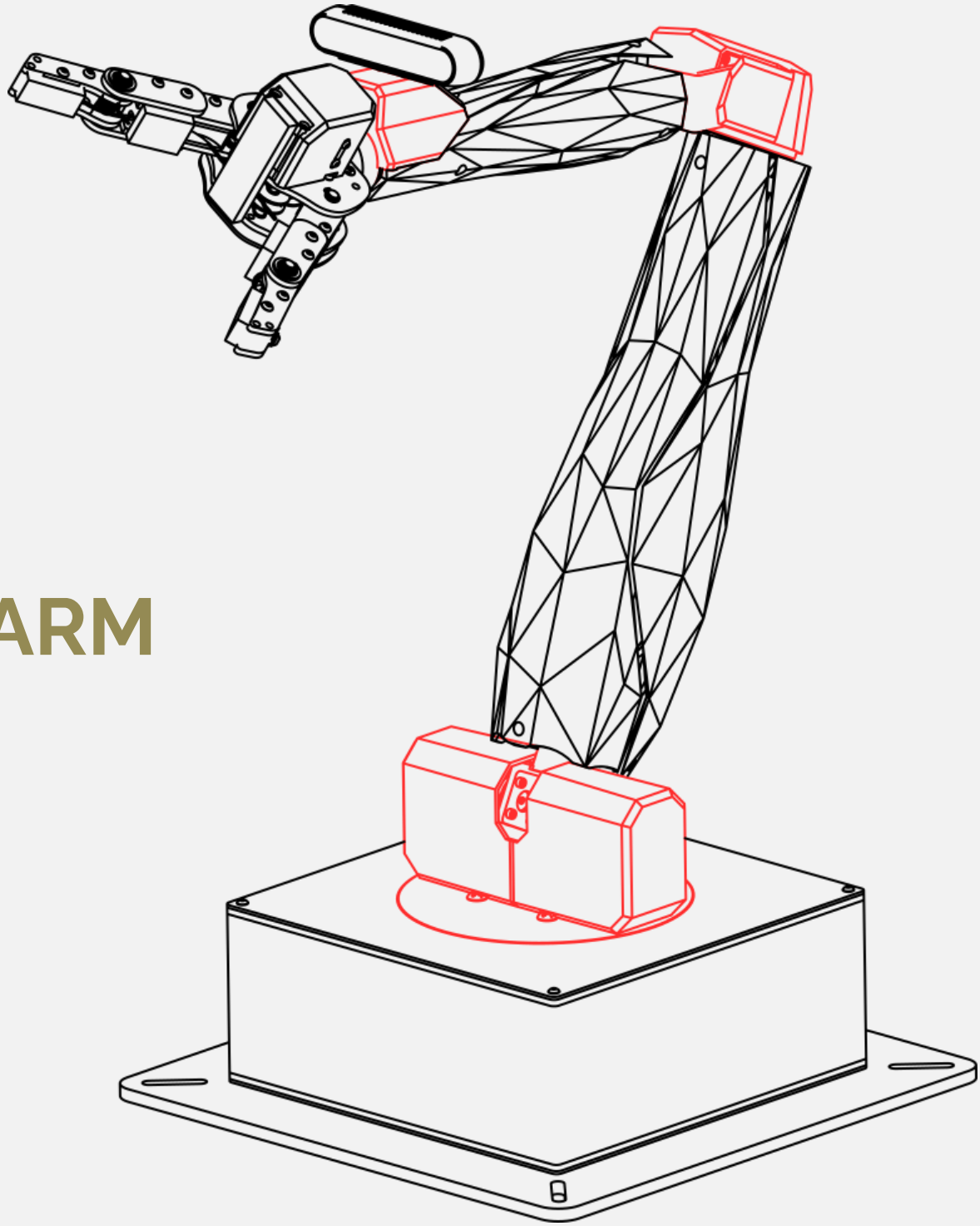

QARM

User Manual

V2.1 - 7th April 2021

© 2021 Quanser Inc., All rights reserved.

Quanser Inc.
119 Spy Court
Markham, Ontario
L3R 5H6
Canada

info@quanser.com
Phone: 19059403575
Fax: 19059403576
Printed in Markham, Ontario.

For more information on the solutions Quanser Inc. offers, please visit the web site at:
http://www.quanser.com

This document and the software described in it are provided subject to a license agreement. Neither the software nor this document may be used or copied except as specified under the terms of that license agreement. Quanser Inc. grants the following rights: a) The right to reproduce the work, to incorporate the work into one or more collections, and to reproduce the work as incorporated in the collections, b) to create and reproduce adaptations provided reasonable steps are taken to clearly identify the changes that were made to the original work, c) to distribute and publicly perform the work including as incorporated in collections, and d) to distribute and publicly perform adaptations. The above rights may be exercised in all media and formats whether now known or hereafter devised. These rights are granted subject to and limited by the following restrictions: a) You may not exercise any of the rights granted to You in above in any manner that is primarily intended for or directed toward commercial advantage or private monetary compensation, and b) You must keep intact all copyright notices for the Work and provide the name Quanser Inc. for attribution. These restrictions may not be waved without express prior written permission of Quanser Inc.

FCC Notice This device complies with Part 15 of the FCC rules. Operation is subject to the following two conditions: (1) this device may not cause harmful interference, and (2) this device must accept any interference received, including interference that may cause undesired operation.

Industry Canada Notice This Class A digital apparatus complies with Canadian ICES-003. Cet appareil numérique de la classe A est conforme à la norme NMB-003 du Canada.

Waste Electrical and Electronic Equipment (WEEE)

This symbol indicates that waste products must be disposed of separately from municipal household waste, according to Directive 2002/96/EC of the European Parliament and the Council on waste electrical and electronic equipment (WEEE). All products at the end of their life cycle must be sent to a WEEE collection and recycling center. Proper WEEE disposal reduces the environmental impact and the risk to human health due to potentially hazardous substances used in such equipment. Your cooperation in proper WEEE disposal will contribute to the effective usage of natural resources.

CE Compliance CE

This product meets the essential requirements of applicable European Directives as follows:

- 2006/95/EC; Low-Voltage Directive (safety)
- 2004/108/EC; Electromagnetic Compatibility Directive (EMC)

Warning: This is a Class A product. In a domestic environment this product may cause radio interference, in which case the user may be required to take adequate measures

Caution

This equipment is designed to be used for educational and research purposes and is not intended for use by the public. The user is responsible to ensure that the equipment will be used by technically qualified personnel only. While the end-effector board provides connections for external user devices, users are responsible for certifying any modifications or additions they make to the default configuration.

Table of Contents

A. Presentation 4

B. Configuration 6

C. Handling and Setup 7

D. Workspace 8

E. Hardware Components 9

- i. Base and Joints 9
  - 1. Sensing 9
  - 2. Actuation 9
- ii. Gripper 9
- iii. Stereo Vision 10
- iv. Integrated Data Acquisition (DAQ) 10

F. Specifications 12

G. Environmental 12

H. Electrical Considerations 13

A. Presentation

Quanser's QArm manipulator, pictured in Figure 1, is a 4 degree of freedom (DOF) serial manipulator for education and research in a lab environment. The QArm can be configured with either the QFLEX 2 USB or QFLEX 2 Embedded interface modules, with the former allowing control and access from a computer via a USB connection.

Complete with a variety of actuation modes and a suite of sensors, the arm's roll-pitch-pitch-roll configuration allows for a high reachable workspace, suitable for numerous teaching applications. The dual-finger gripper allows you to interact with objects of a variety of shapes while gauging grip strength via current sense. Numerous components of the QArm are listed in Table 1 and shown in Figures 2 and 3.

Figure 1. QArm 4DOF serial manipulator

Figure 2. QArm Components

ID	Component	ID	Component
1	Base	**9**	Base LED
2	Upper Arm	**10**	Arm LEDs
3	Lower Arm	**11**	Shoulder joint
4	QFLEX USB Panel	**12**	Elbow joint
5	QArm USB-B connector	**13**	Wrist joint
6	Power Connector	**14**	Gripper
7	Power Switch	**15**	End-effector Data Acquisition (DAQ)
8	Camera USB-C Connector	**16**	Camera

Table 1. QArm Components

B. Configuration

The QArm consists of 4 joints in a roll-pitch-pitch-roll configuration – the base, shoulder, elbow, and wrist joints. The first three joints position the end-effector and the last joint orients the gripper as needed at the target position. Most of the workspace of the manipulator is a reachable workspace and not dexterous. The wrist axis is aligned with that of the lower arm. Thus, the wrist angle does not affect the position of the end-effector. Note that the camera is placed just before the wrist and does not rotate with the wrist. Thus, the camera can capture the rotation of an object that interacts with the gripper. The home pose of the manipulator and its link lengths are shown in Figure 3, with parameter values in Table 2. The net reach of the manipulator is $0.800\ \mathrm{m}$ horizontally and $0.940\ \mathrm{m}$ vertically above the worksurface.

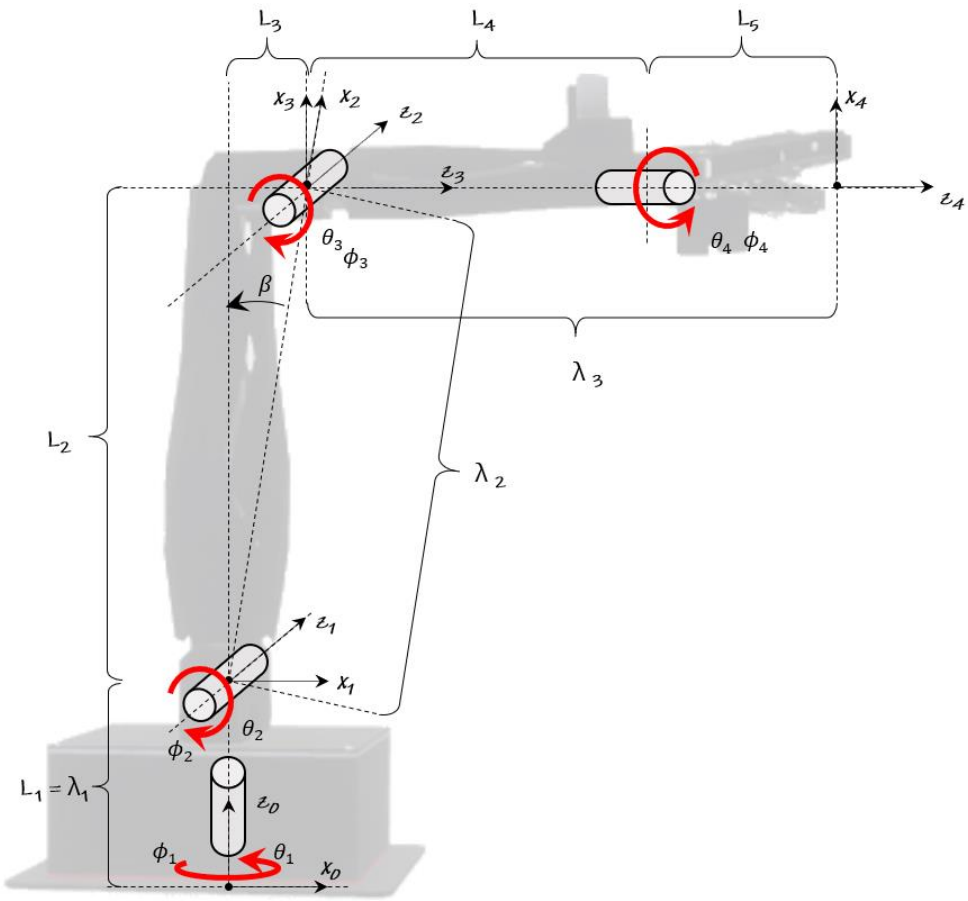

Figure 3. QArm Geometry and Reference Assignment (Standard DH)

Parameter	Value
$\mathbf{L_1}$	$0.14\ m$
$\mathbf{L_2}$	$0.35\ m$
$\mathbf{L_3}$	$0.05\ m$

Parameter	Value
$\mathbf{L_4}$	$0.25\ m$
$\mathbf{L_5}$	$0.15\ m$
$\boldsymbol{\beta}$	$8.13°$

Table 2. QArm Parameters

C. Handling and Setup

To move the QArm, follow these steps,

1. Ensure that the power is disconnected and the USB and camera cables to the base are unplugged.
2. Manipulate the QArm's joints slowly until it achieves the position shown in Figure 4a.
3. Lift and move the QArm using the handlebars on the base plate. Do not lift the manipulator using any other part of the QArm.

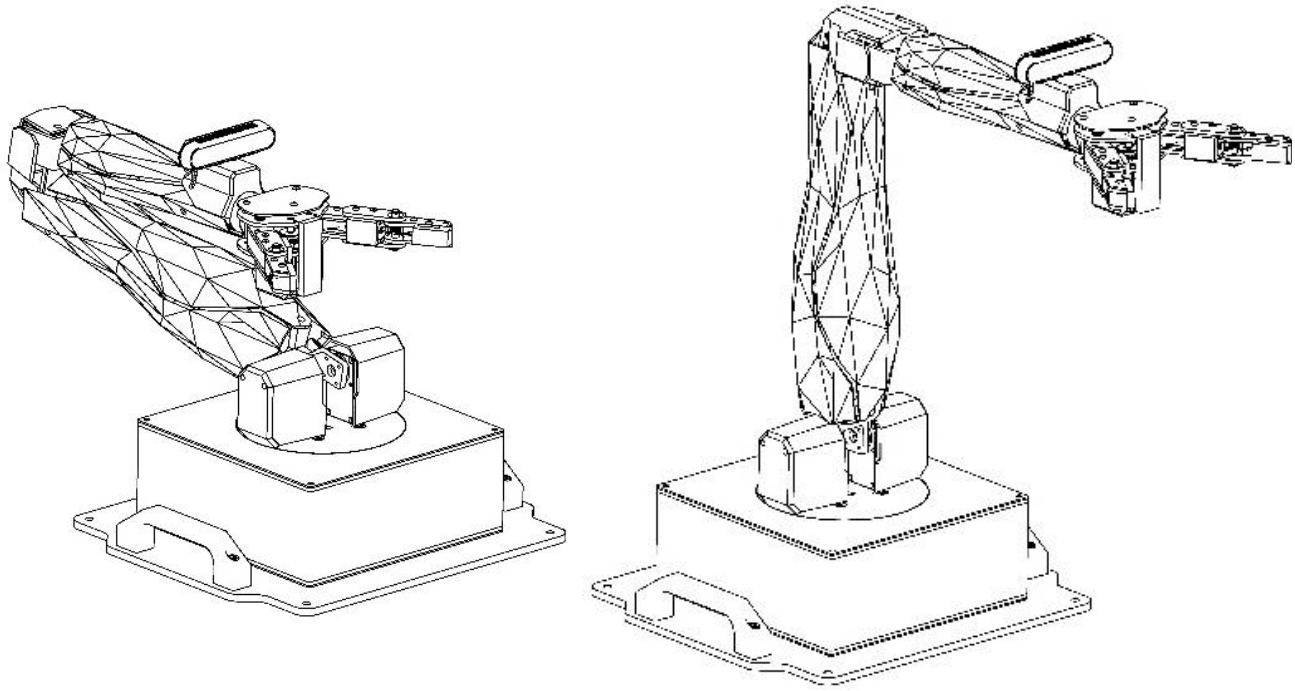

a. Rest Configuration Home Configuration

Figure 4. Rest and Home Configurations of the QArm (note the handlebars on the base)

To prepare the QArm manipulator for operation, follow these steps

1. Ensure that the base is firmly secured to a work surface or table using clamps or bolts (not included).
2. Ensure that a volume of space around the manipulator is dedicated as a work zone that users must stay clear of. The radius of this cylindrical volume should be at least 1 m with a vertical height clearance of 1 m above the work surface (on which the arm is clamped/mounted), all centered around the QArm.

To operate your QArm, follow these steps,

1. Ensure that the power switch is OFF and connect the QArm to a power supply.
2. Connect the QArm to a PC via the provided USB-A (PC end) to USB-B cable (QArm end).
3. Slowly move the QArm to the home position (Figure 4b) while fully supporting it and turn the power switch to the ON position. The QArm should now hold its position and you can let it go.
4. The QArm is ready for use.

If the manipulator does not hold position or goes limp on power up contact tech@quanser.com.

D. Workspace

The manipulator has a net horizontal reach of 0.7536m. The net vertical reach stands at 0.8936m due to the added height from the base. Figure 5a shows a vertical slice of the workspace, where the asymmetric reach of the manipulator is displayed. This slice can be rotated as shown in Figure 5b for a total of 340 degrees.

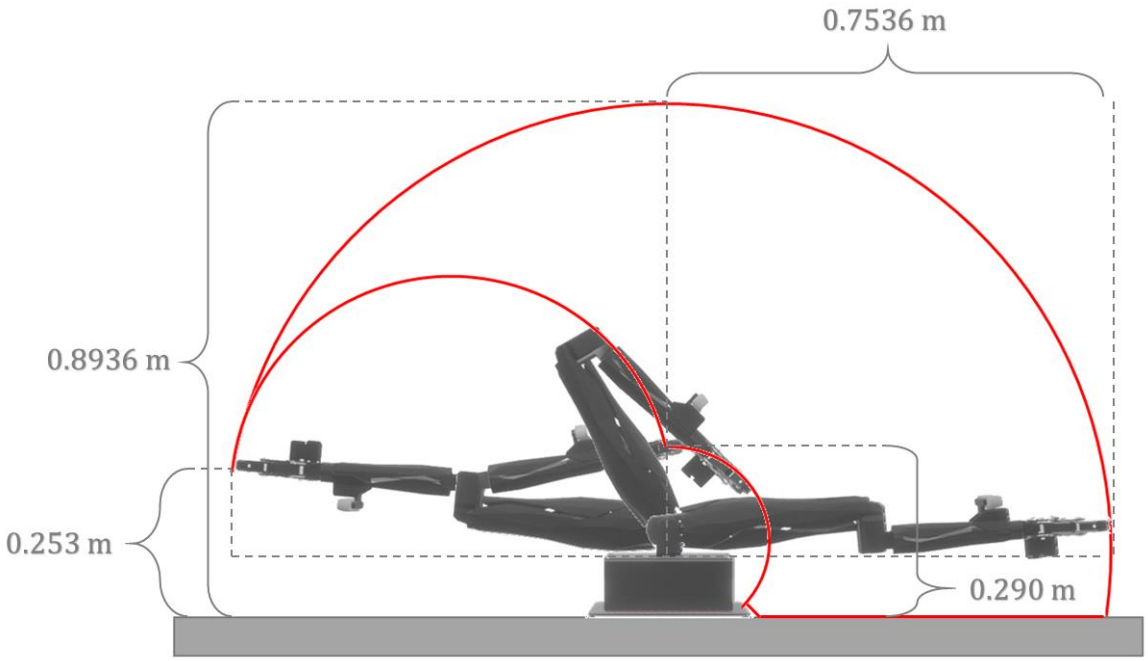

a. side view

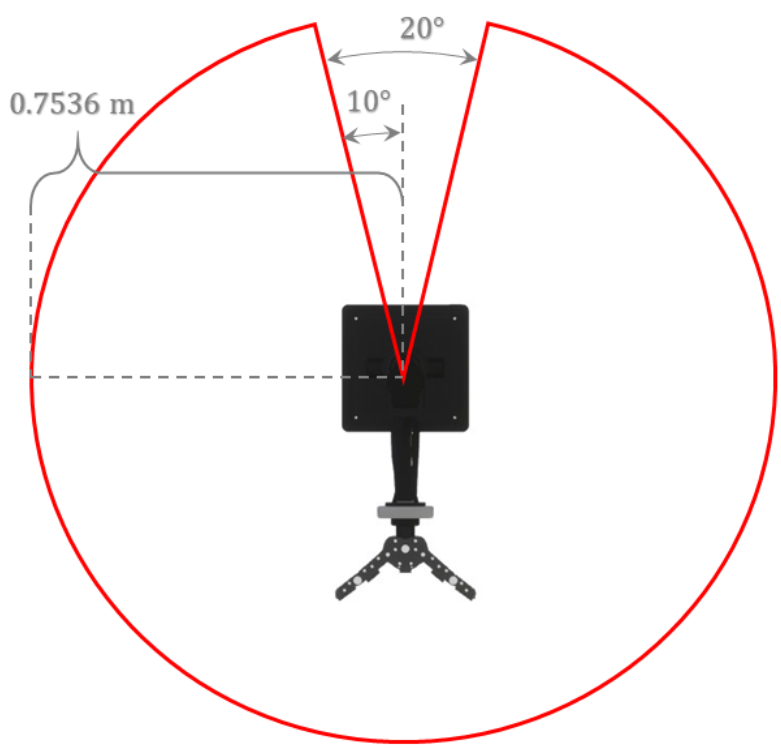

b. top view

Figure 5. Reachable workspace of the QArm manipulator

E. Hardware Components

i. Base and Joints

The QArm base houses the base joint and provides peripherals for interfacing with the arm via the USB-B connector and the camera via the USB-C connector. See Figure 2 for more details on the base peripherals.

All the joints use Dynamixel servo motors that are complete with 12-bit programmable magnetic encoder (4096 counts/rev, see attached datasheet or here), velocity measurement, current sensors, and temperature sensors. The base, shoulder, and elbow use the XM540-W270-R Dynamixel servomotor, with the shoulder using two servos to improve performance. The wrist joint uses the XM430-W350-R Dynamixel servomotor. For safety, the RS-485 command chain is not exposed. More information on the Dynamixels is available in the datasheets attached, and can also be found here for the XM540-W270-R or here for the XM430-W350-R. More information on the I/O below can be found in the Basic I/O example.

1. Sensing

The QArm's sensing interface directly provides joint position data in radians, joint speed data in rad/s, current in Amperes and Temperature in °C. The PWM reading is also available as a signed percentage corresponding to a voltage in the range of -12 to 12V.

2. Actuation

Four write modes are available – a Position mode, PWM mode, Current mode, and a Limp mode. The Position mode allows you to directly command a joint position in radians, and low-level closed loop controllers acquire the position for you. In this mode, the PWM sense provides the PWM command output of the low-level controllers. The PWM, Current and Limp modes are open loop. Ensure that you have a stable controller or are supporting the QArm when operating it in these modes to prevent the arm from accidental damage. For more information on using the modes, see the QArm Software Guide.

ii. Gripper

The QArm uses a tendon-based 2-finger gripper. This underactuated system uses a single XC430-W240-T Dynamixel to actuate two articulated fingers, each with two links. Foam pads on the fingers improves grip with at least 2 and up to 5 points of contact as it grips around the shape of an object (see Figure 6). The datasheet for the gripper actuator is attached or can be found here.

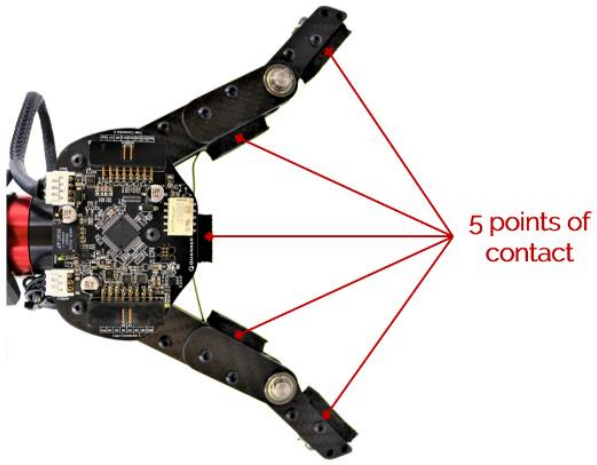

Figure 6. gripper's multiple points of contact

Figure 7. Intel RealSense D415 camera

iii. Stereo Vision

The QArm platform comes equipped with an Intel RealSense D415 RGB-D camera (Figure 7). It includes an IR projector and two IR receivers, making this unit a stereo tracking solution. The camera can provide RGB, Infrared (left and right) and depth streams of data at frame rates and resolutions summarized in Table 3, as well as at fields of view in Table 4. More information can be found here. The minimum depth distance measurable is 0.16m and the depth module uses a rolling shutter.

RGB		Infrared		Depth	
Resolution	Max. Frame Rate	Resolution	Max. Frame Rate	Resolution	Max. Frame Rate
1920 x 1080	30	1280 x 800	30	1280 x 720	30
1280 x 720	30	1280 x 720	30	848 x 480	90
640 x 480	60	640 x 480	90	640 x 480	90

Table 3: Intel RealSense resolutions and frame rates

Camera	Horizontal	Vertical	Diagonal
RGB	69.4˚ ± 3˚	42.5˚ ± 3˚	77˚ ± 3˚
Depth	65˚ ± 2˚	40˚ ± 1˚	72˚ ± 2˚

Table 4. Intel RealSense D415 field of view

iv. Integrated Data Acquisition (DAQ)

The QArm's end-effector comes equipped with a Data Acquisition (DAQ) PCB with two user connectors, two ADCs and a relay for enabling 12V. These components are summarized in Table 5 and displayed in Figure 8. Note that while the end-effector board provides connections for external user devices, users are responsible for certifying any modifications or additions they make to the default configuration.

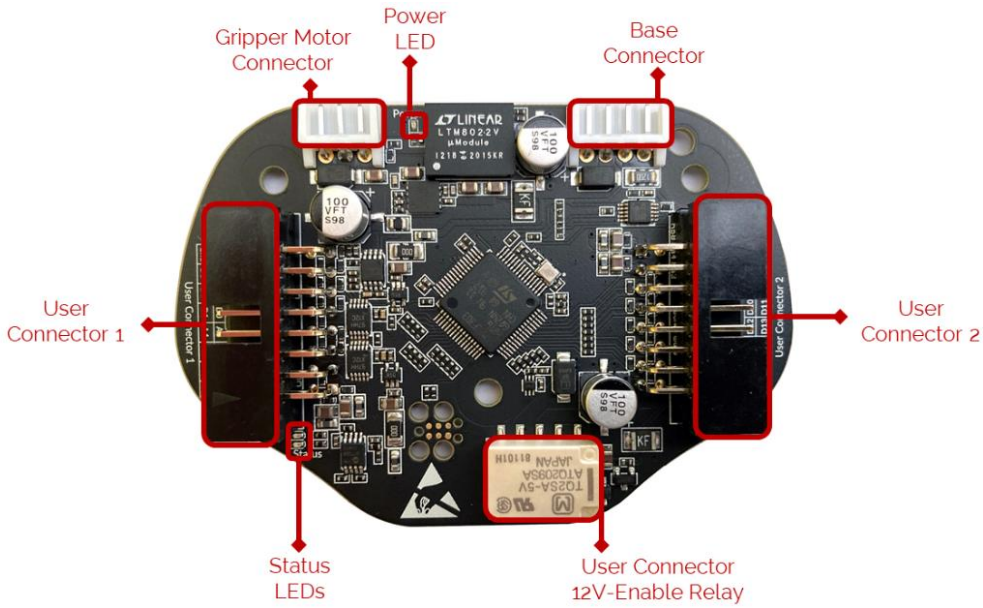

Figure 8. QArm End-Effector IO Board

User Connector 1			
Pin	**Function – Main (Alternate) [Details]**	**Pin**	**Function – Main (Alternate) [Details]**
1	$+5\ V$ Supply $[600\ mA]$	**9**	Digital I/O 0 (Encoder CH2)
2	Ground	**10**	Digital I/O 1 (Encoder CH1)
3	$+3.3\ V$ Supply $[500\ mA]$	**11**	Digital I/O 2 (UART TX)
4	Analog Input 0	**12**	Digital I/O 3 (UART RX)
5	Analog Input 1	**13**	Digital I/O 4
6	Analog Input 2	**14**	Digital I/O 5
7	Analog Input 3	**15**	Digital I/O 6
8	Analog Input 4	**16**	Ground

User Connector 2			
Pin	**Function – Main (Alternate) [Details]**	**Pin**	**Function – Main (Alternate) [Details]**
1	$+5\ V$ Supply $[600\ mA]$	**9**	Digital I/O 12
2	Ground	**10**	Digital I/O 13
3	$+3.3\ V$ Supply $[500\ mA]$	**11**	Digital I/O 14 (SPI MOSI)
4	Digital I/O 7 (PWM 1)	**12**	Digital I/O 15 (SPI MISO)
5	Digital I/O 8 (PWM 2)	**13**	Digital I/O 16 (SPI CLK)
6	Digital I/O 9 (PWM 3)	**14**	Digital I/O 17 (SPI SS)
7	Digital I/O 10 (I^2C SDA)	**15**	$+12\ V$ Supply $[1.5\ A]$ *
8	Digital I/O 11 (I^2C SCL)	**16**	Ground

Table 5. User Connectors 1 and 2

* the 12V supply is toggled ON/OFF via the 12V-Enable relay (fig. 8) via digital I/O pin 18

Consider the following when using the end-effector I/O,

1. The total current sourced from the sum of all $+3.3V$ and $+5V$ supply cannot exceed $600mA$.
2. The Digital I/O pins can source or sink $25mA$ per pin.
3. The total current sourced or sunk by the sum of all digital I/O pins must not exceed $80mA$.
4. The digital I/O pins operate at $3.3V$, and are $5V$ tolerant.
5. The digital I/O pins are TTL and LVTTL compliant and are $3.3V$ CMOS compliant.
6. The analog inputs can range from $0V$ to $5V$ with 12-bit resolution.

Refer to the QUARC documentation for more details on SPI/I^2C/UART specifications.

F. Specifications

The QArm's payload capacity and corresponding operation times are summarized in Table 6. The joint performance specifications are summarized in Table 7. Do not exceed the instantaneous current/torque limits for more than 0.1s.

Payload (g)	350	500	750
Max. Continuous Operation Time (min)	∞^{+}	25^{+}	15^{+}

Table 6. QArm payload capacity
[+]durations tested at room temperature

Joint Specifications									
#	**Item**		**Base**	**Shoulder**	**Elbow**	**Wrist**	**Units**	**Gripper**	**Units**
1	Joint range	Min. Max	-170 $+170$	-85 $+85$	-95 $+75$	-160 $+160$	degrees	0 100	%
2	Max. speed		$\pm\pi/2$	$\pm\pi/2$	$\pm\pi/2$	$\pm\pi/2$	rad/s	± 100	%/s
3	Max. acceleration		$\pm\pi/3$	$\pm\pi/3$	$\pm\pi/3$	$\pm\pi/3$	rad/s/s	± 400	%/s/s
4	Current	Instantaneous Continuous	4.4 1.1	8.8 2.2	4.4 1.1	2.3 0.6	Amps	1.4 0.35	Amps
5	Torque	Instantaneous Continuous	10.6 2.65	21.2 5.3	10.6 2.65	4.1 1.0	Nm	1.9 0.5	Nm

Table 7. QArm joint specifications

G. Environmental

The QArm is designed to function under the following environmental conditions:

- Standard rating
- Indoor use only
- Atmospheric conditions
  - Temperature - 15°C to 35°C
  - Altitude - up to 2000 m
  - Relative humidity - 30% to 60%
  - Air Pressure – 86 kPa (860 mbar) – 106 kPa (1060 mbar)
- Pollution Degree 2
- Mains supply voltage fluctuations up to 10% of nominal voltage
- Maximum transient overvoltage 2500 V

H. Electrical Considerations

	ESD warning	The QArm end-effector components are sensitive to electrostatic discharge. Before handling the board, ensure that you have been properly grounded.
	Caution	Always monitor the current draw and motor temperature to ensure that you do not exceed the maximum current draw or 50℃.
	Caution	Do not have conductive material touch the end-effector IO board as it can short and damage the electronics.
	Caution	The QArm is not waterproof.

© Quanser Inc., All rights reserved.

QUANSER
INNOVATE · EDUCATE

Solutions for teaching and research. Made in Canada.